NOTES:

1. INTERPRET DIMENSIONS AND TOLERANCES PER ANSI Y14.5M
2. DIMENSIONS ARE IN INCHES
3. DIMENSIONS APPLY AT ROOM TEMPERATURE. OPERATING TEMP 80 K
4. GEOMETRY IS DEFINED IN PRO ENGINEER CAD MODELS/FILES
5. DRAWING AND MODELS COMBINED DEFINE FINISHED MACHINED PART
6. (1) MAGNETIC PERMABILITY SHALL NOT EXCEED 1.02 AS TESTED BY A SEVERN-TYPE INDICATOR.

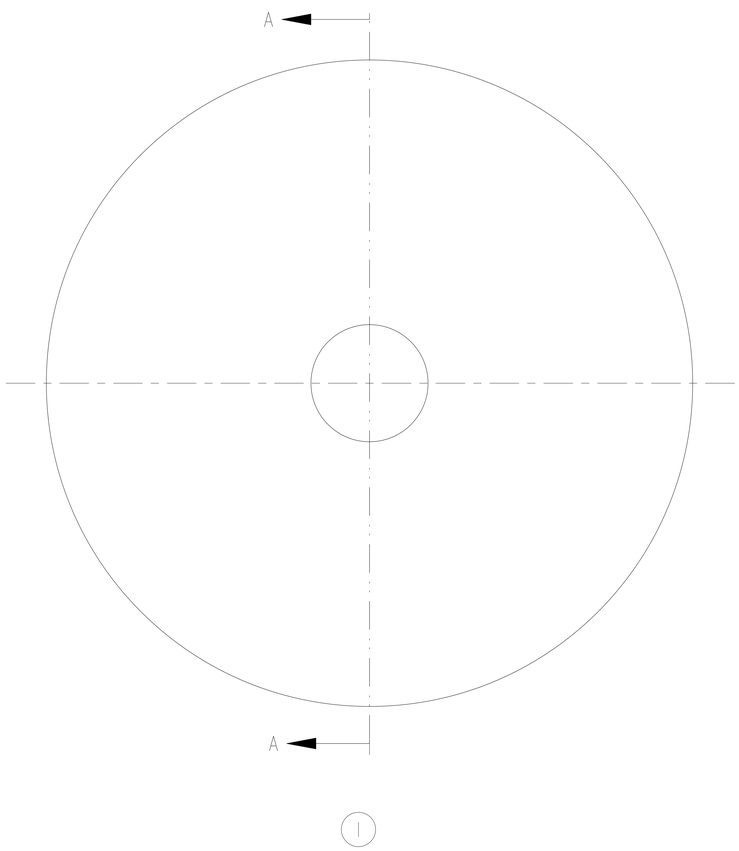

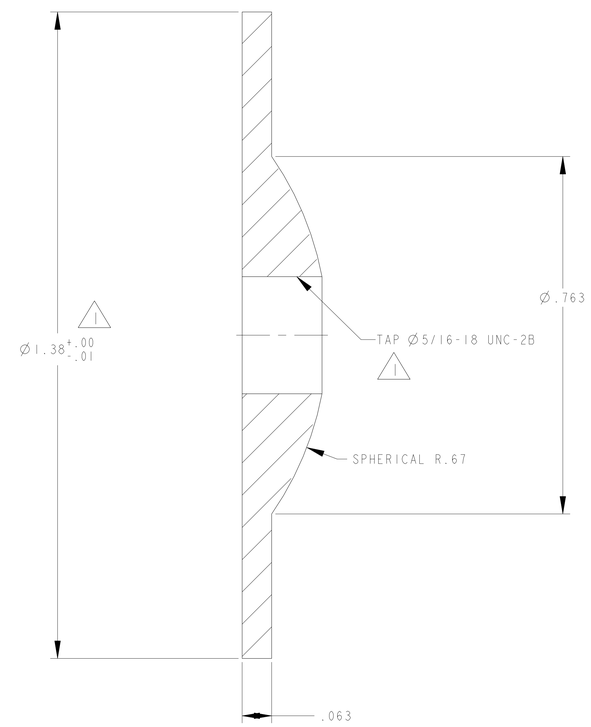

SECTION A-A

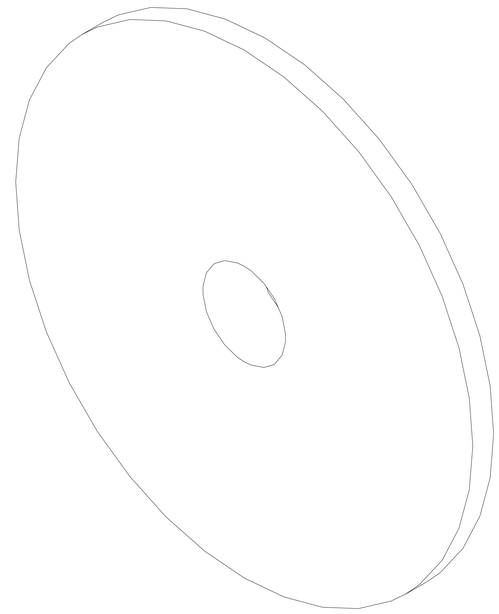

RELEASED FOR FABRICATION / INSTALLATION

PPPL Drafting: Jerry Siegel 2005.04.05 09:40:33 -05'00'

	AR		SE1405-263P	WASHER, SPERICAL, CONVEX	316L SS	--	1
SE1405-250	CAGE CODE		PART OR IDENTIFYING NO	NOMENCLATURE OR DESCRIPTION	MATERIAL	SPECIFICATION	FIND NO
		NEXT ASSEMBLY		PARTS LIST			

SE1405-263P

NO REPRESENTATION OR WARRANTY,EXPRESSED OR IMPLIED,IS MADE AS TO THE ACCURACY, COMPLETENESS OR USEFULNESS OF THE INFORMATION OR STATEMENTS CONTAINED IN THESE DRAWINGS, OR THAT THE USE OR DISCLOSURE OF ANY INFORMATION, APPARATUS, METHOD OR PROCESS DISCLOSED IN THESE DRAWINGS MAY NOT INFRINGE PRIVATE RIGHTS OF OTHERS. NO LIABILITY IS ASSUMED WITH RESPECT TO THE USE OF, OR FOR DAMAGES RESULTING FROM THE USE OF, ANY INFORMATION, APPARATUS, METHOD OR PROCESS DISCLOSED IN THESE DRAWINGS. DRAWINGS MADE AVAILABLE FOR INFORMATION TO BIDDER ARE NOT TO BE USED FOR OTHER PURPOSES, AND ARE TO BE RETURNED UPON REQUEST OF THE FORWARDING CONTRACTOR.

P THIS DRAWING PRODUCED ON PRO-ENGINEER

REV	DESCRIPTION (REVISION OR ISSUE PURPOSE)	BY	DATE	CHK	DEPT	DATE	PE	REQ	DATE	ORNL	DOE	DATE
1	REVISE PART AND DRAWING PER ECN 4977	GLL	3-05	MEC			DEW					

SCALE 8

TOLERANCES UNLESS OTHERWISE SPECIFIED
FRACTIONS :
XX DECIMALS ±.01
XXX DECIMALS ±.005
ANGLES ±0°15'
BREAK SHARP EDGES .06 MAX
FINISH 125 UNLESS OTHERWISE SPECIFIED

DRAWING APPROVALS		DATE
DES	PAUL MILLER	4-12-04
DRW	PAUL MILLER	4-15-04
CHK	M COLE	3-05
SECT	:	:
DEPT	:	:
PE	D WILLIAMSON	3-05
CR	:	:
PJ	:	:
REQ	:	:
PPPL DFT	S SIEGLE	3-05
	:	:
	:	:

UT-BATTELLE

Oak Ridge National Laboratory
managed for the DEPARTMENT OF ENERGY under U.S. GOVERNMENT contract DE-AC05-00OR22725
UT-BATTELLE, LLC. Oak Ridge, Tennessee

PROJECT NAME: NATIONAL COMPACT STELLARATOR EXPERIMENT

WASHER, SPERICAL, CONVEX

VERSION NO.	PLANT	BLDG	FL	SHT	OF	TYPE	CLASS
1	X-10	5700	3	1	1	S	U

RELEASE LEVEL: Fabrication

SE1405-263P REV 1