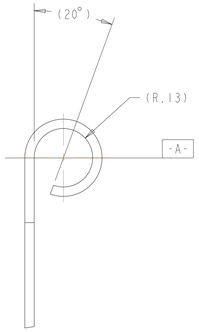

DETAIL A
SCALE 4.0

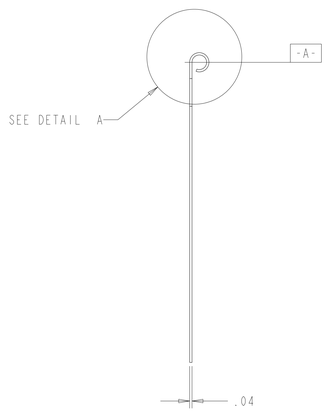

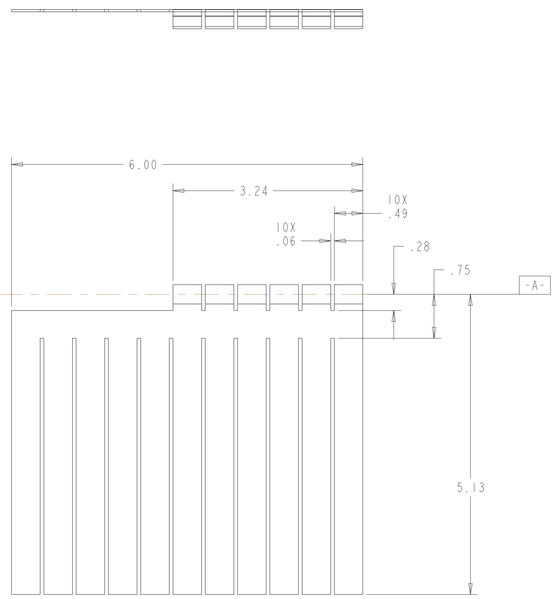

1
SCALE 1 : 1

NOTES:

1. INTERPRET DIMENSIONS AND TOLERANCES PER ANSI Y14.5M
2. DIMENSIONS ARE IN INCHES
3. DIMENSIONS APPLY AT ROOM TEMPERATURE. OPERATING TEMP 80 K.
4. GEOMETRY IS DEFINED IN PRO ENGINEER CAD MODELS/FILES SE1406-068.PRT
5. DRAWING AND MODELS COMBINED DEFINE FINISHED MACHINED PART.

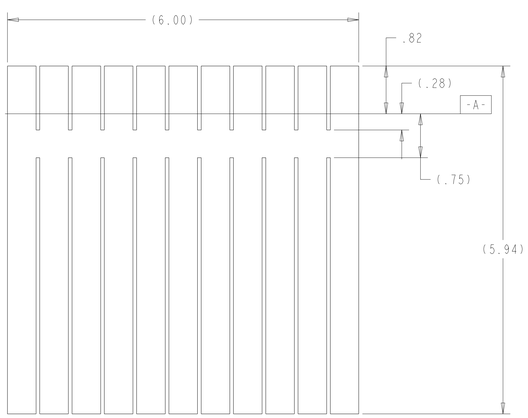

FLAT PATTERN FOR REFERENCE

SCALE 1 : 1

NOTE:
FLAT PATTERN TYPICAL FOR
SE1406-068.PRT
AND SE1406-069.PRT

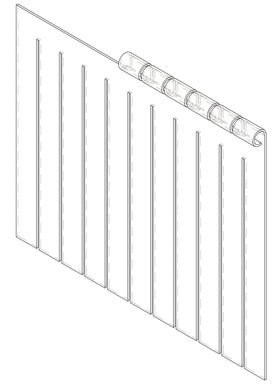

ISOMETRIC VIEW

RELEASED FOR FABRICATION / INSTALLATION
PPPL Drafting: Jerry Siegel
2005.03.09 08:53:38 -05'00'

next assy						
	1	-1	CHILL PLATE	COPPER	UNS C10200	1
	SE1406-00 CAGE CODE	PART OR IDENTIFYING NO	NOMENCLATURE OR DESCRIPTION	MATERIAL	SPECIFICATION	FIND NO
	NEXT ASSEMBLY		PARTS LIST			

SE1406-068

NO REPRESENTATION OR WARRANTY, EXPRESSED OR IMPLIED, IS MADE AS TO THE ACCURACY, COMPLETENESS OR USEFULNESS OF THE INFORMATION OR STATEMENTS CONTAINED IN THESE DRAWINGS, OR THAT THE USE OR DISCLOSURE OF ANY INFORMATION, APPARATUS, METHOD OR PROCESS DISCLOSED IN THESE DRAWINGS MAY NOT INFRINGE PRIVATE RIGHTS OF OTHERS. NO LIABILITY IS ASSUMED WITH RESPECT TO THE USE OF, OR FOR DAMAGES RESULTING FROM THE USE OF, ANY INFORMATION, APPARATUS, METHOD OR PROCESS DISCLOSED IN THESE DRAWINGS. DRAWINGS MADE AVAILABLE FOR INFORMATION TO BIDDER ARE NOT TO BE USED FOR OTHER PURPOSES, AND ARE TO BE RETURNED UPON REQUEST OF THE FORWARDING CONTRACTOR.

P THIS DRAWING PRODUCED ON PRO-ENGINEER

REV	DESCRIPTION (REVISION OR ISSUE PURPOSE)	BY	DATE	CHK	DEPT	DATE	PE	REQ	DATE	ORNL	DOE	DATE

SCALE NOTED
TOLERANCES UNLESS OTHERWISE SPECIFIED
FRACTIONS :
XX DECIMALS ±.01
XXX DECIMALS ±.005
ANGLES ±0°15'
BREAK SHARP EDGES .06 MAX
FINISH .125 UNLESS OTHERWISE SPECIFIED

DRAWING APPROVALS		DATE
DES	PJ FOGARTY	3-2-05
DRW	G LOVETT	3-2-05
CHK	:	:
SECT	:	:
DEPT	:	:
PE	D WILLIAMSON	3-2-05:
CR	:	:
PJ	:	:
REQ	:	:
PPPL DRFT	J SIEGEL:	3-05:

UT-BATTELLE
Oak Ridge National Laboratory
managed for the DEPARTMENT OF ENERGY under U.S. GOVERNMENT contract DE-AC05-00OR22725
UT-BATTELLE, LLC. Oak Ridge, Tennessee

PROJECT NAME: NATIONAL COMPACT STELLARATOR EXPERIMENT

TRC LOWER LEAD BLOCK ENCLOSURE
CHILL PLATE
SIDE "B"

VERSION NO.	PLANT	BLDG	FL	SHT	OF	TYPE	CLASS
2	X-10	5700	3	1	1	S	U

RELEASE LEVEL: Fabrication
SE1406-068
REV 0