NOTES:
1. INTERPRET DIMENSIONS AND TOLERANCES PER ANSI Y14.5M
2. DIMENSIONS ARE IN INCHES.
3. REMOVE ALL DIRT, GREASE AND OIL. VISUALLY INSPECT AFTER CLEANING.
4. MATCH REAM FOR DOWEL PIN (ITEM 4) AT ASSEMBLY.

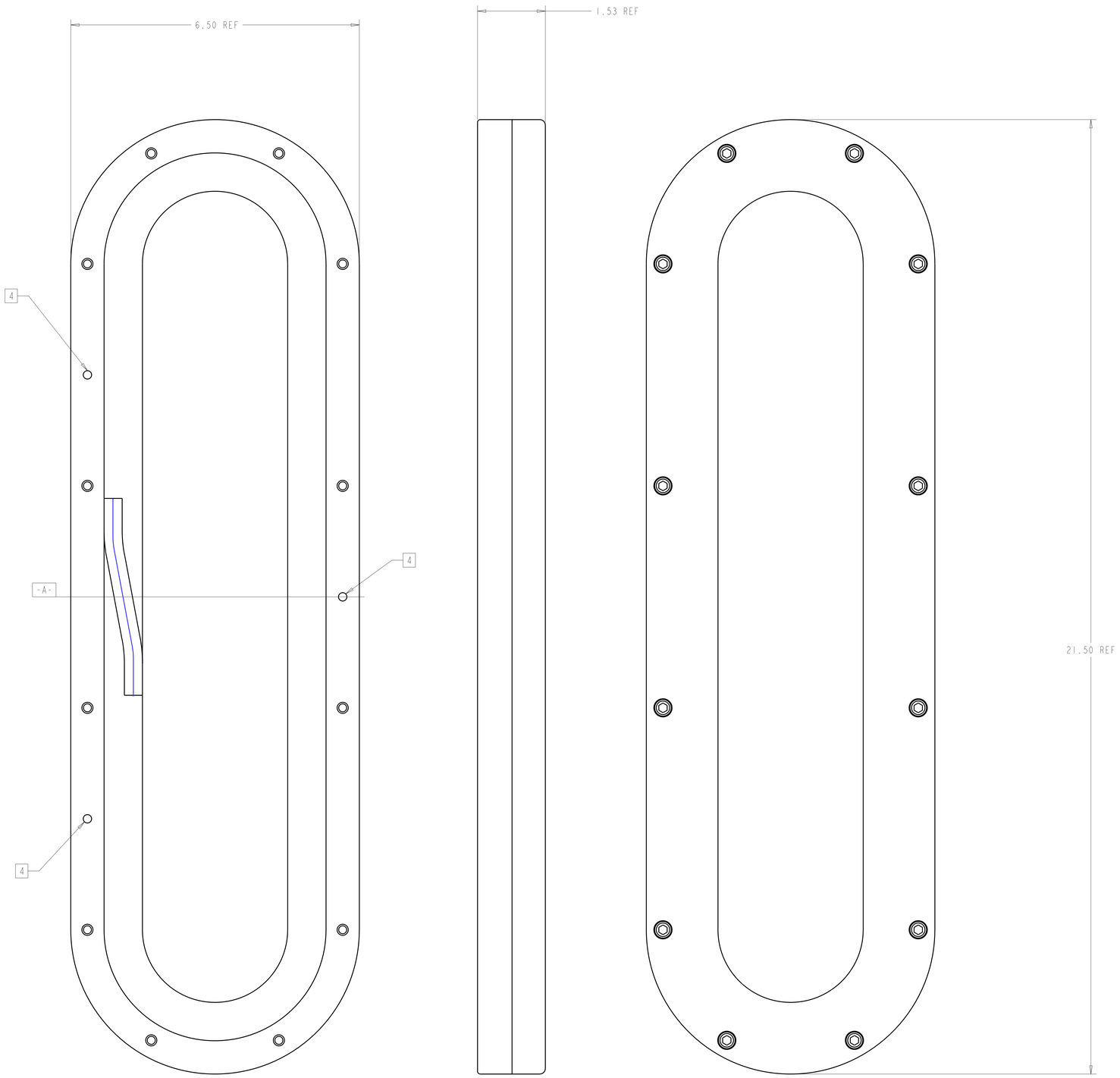

SCALE 1.000 (1)

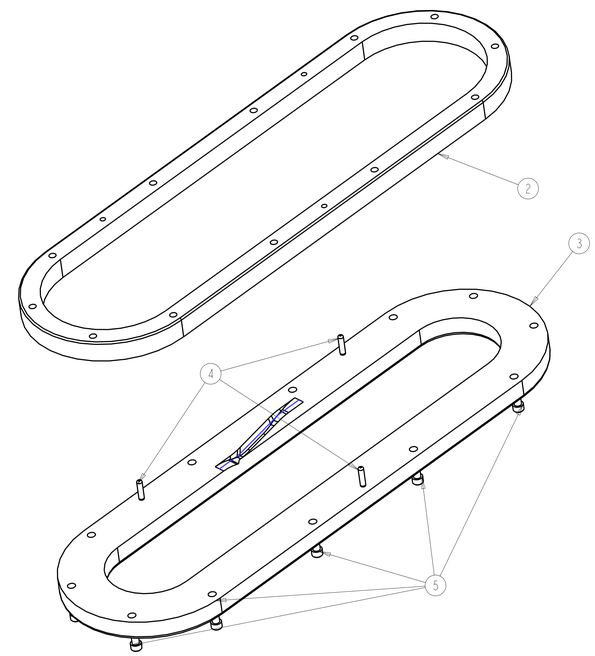

SCALE 0.500

FOR COMMENT ONLY

next assy	CAGE CODE	PART OR IDENTIFYING NO	NOMENCLATURE OR DESCRIPTION	MATERIAL	SPECIFICATION	FIND NO
	12		SHCS 1/4-20 UNC x 1.5 LG.	SSTL.	SILVER PLATED	5
	3		DOWEL	SSTL.	Ø.187 x .75 LG	4
	1	SE1405-101	BASEPLATE	SSTL.	316 L	3
	1	SE1405-102	SIDEPLATE	SSTL.	316 L	2
		SE1405-100	WINDING FORM	AS NOTED	AS NOTED	1

NEXT ASSEMBLY

PARTS LIST

NO REPRESENTATION OR WARRANTY,EXPRESSED OR IMPLIED,IS MADE AS TO THE ACCURACY, COMPLETENESS OR USEFULNESS OF THE INFORMATION OR STATEMENTS CONTAINED IN THESE DRAWINGS, OR THAT THE USE OR DISCLOSURE OF ANY INFORMATION, APPARATUS, METHOD OR PROCESS DISCLOSED IN THESE DRAWINGS MAY NOT INFRINGE PRIVATE RIGHTS OF OTHERS. NO LIABILITY IS ASSUMED WITH RESPECT TO THE USE OF, OR FOR DAMAGES RESULTING FROM THE USE OF, ANY INFORMATION, APPARATUS, METHOD OR PROCESS DISCLOSED IN THESE DRAWINGS. DRAWINGS MADE AVAILABLE FOR INFORMATION TO BIDDER ARE NOT TO BE USED FOR OTHER PURPOSES, AND ARE TO BE RETURNED UPON REQUEST OF THE FORWARDING CONTRACTOR.

P THIS DRAWING PRODUCED ON PRO-ENGINEER

REV	DESCRIPTION	BY	DATE	CHK	DEPT	DATE	PE	REQ	DATE	ORNL	DOE	DATE
	REVISION OR ISSUE PURPOSE					REVISION APPROVAL						

SCALE XX

TOLERANCES UNLESS OTHERWISE SPECIFIED
FRACTIONS :
XX DECIMALS ±.01
XXX DECIMALS ±.005
ANGLES ±0°15'
BREAK SHARP EDGES .06 MAX
FINISH .125 UNLESS OTHERWISE SPECIFIED

DRAWING APPROVALS		DATE
DES	P.J.FOGARTY	1-20-04
DRW	G.FORTIER	1-20-04
CHK	:	:
SECT	:	:
DEPT	:	:
PE	:	:
CR	:	:
PJ	:	:
REQ	:	:
PPPL DRFT	:	:
	:	:
	:	:

UT-BATTELLE

Oak Ridge National Laboratory
managed for the DEPARTMENT OF ENERGY under
U.S. GOVERNMENT contract DE-AC05-000R22725
UT-BATTELLE, LLC. Oak Ridge, Tennessee

PROJECT NAME
NATIONAL COMPACT STELLARATOR EXPERIMENT

BASEPLATE

VERSION NO.	PLANT	BLDG	FL	SHT	OF	TYPE	CLASS
###	ORNL	5700	3	1	1	D	U

RELEASE LEVEL ###

SE1405-100

REV 0

SE1405-100