NOTES:

1. INTERPRET DIMENSIONS AND TOLERANCES PER ANSI Y14.5M
2. DIMENSIONS ARE IN INCHES.
3. PART SURFACES ARE DEFINED BY MODEL FILE SE142C-134.STP.
4. MACHINE PART SURFACES TO PROFILE TOLERANCE OF ±.010-IN.
5. HOLE LOCATIONS ARE DEFINED BY MODEL SURFACES, BUT DETAILS ARE DEFINED BY DRAWING NOTE CALLOUTS.
6. REMOVE ALL BURRS AND SHARP EDGES

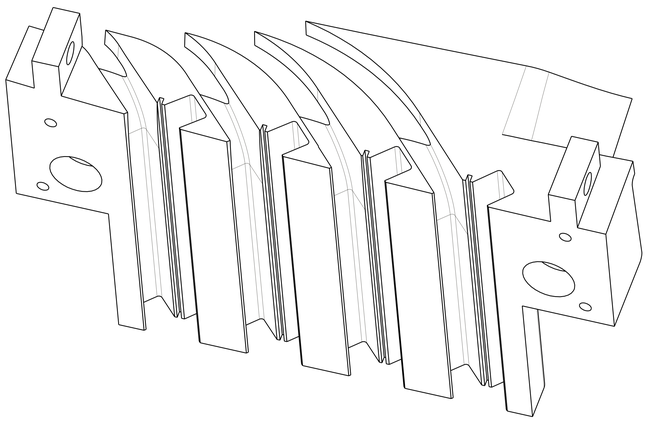

ISOMETRIC VIEW

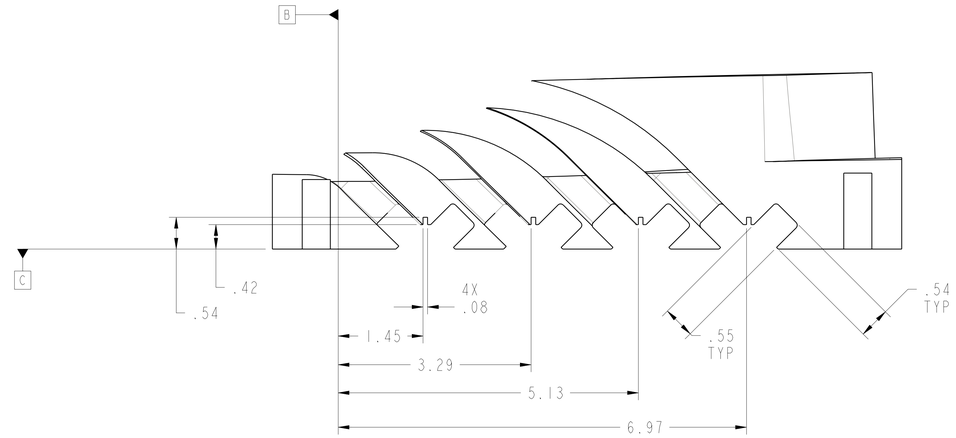

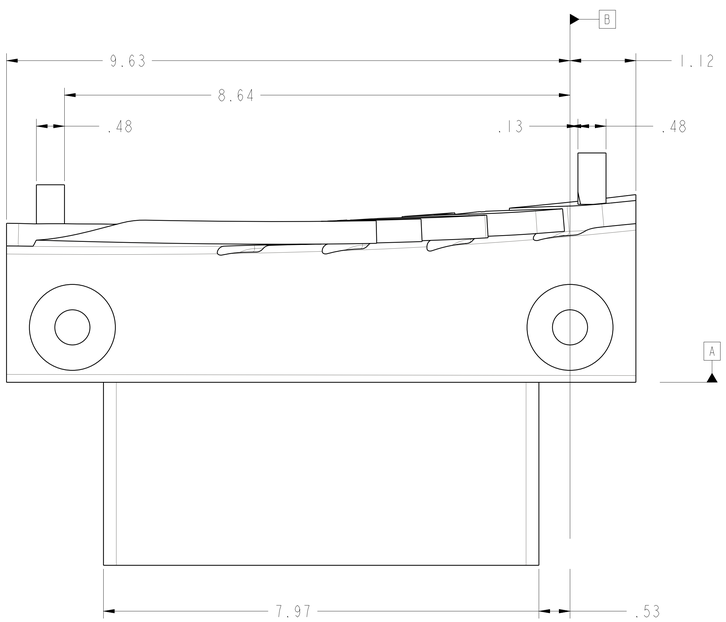

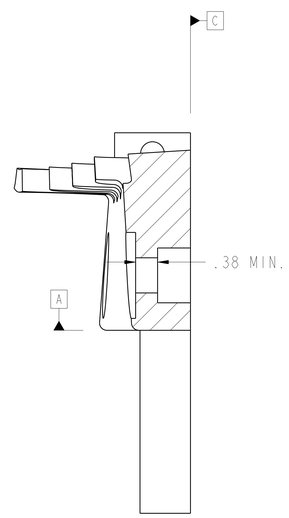

SECTION A-A

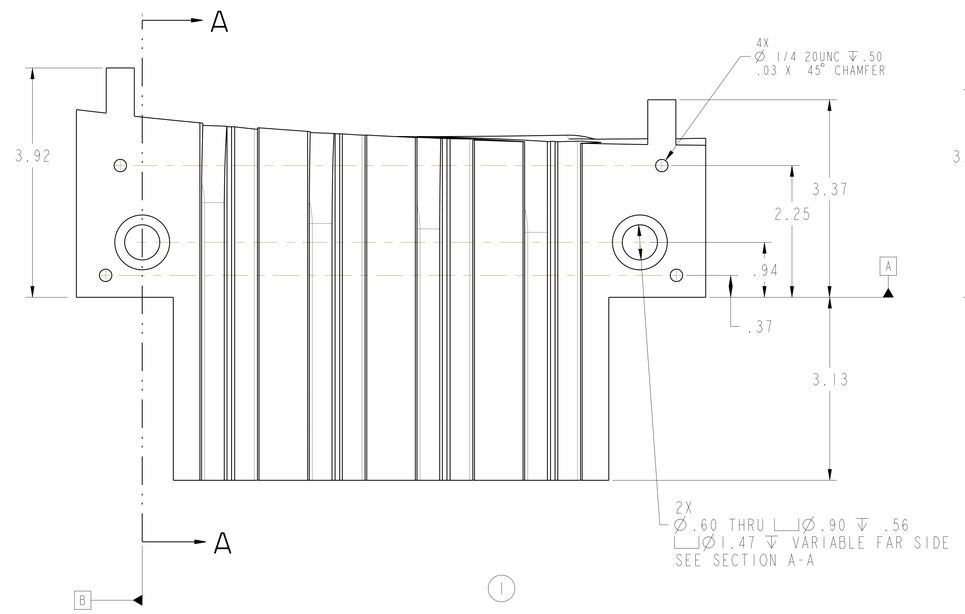

SCALE 1.00

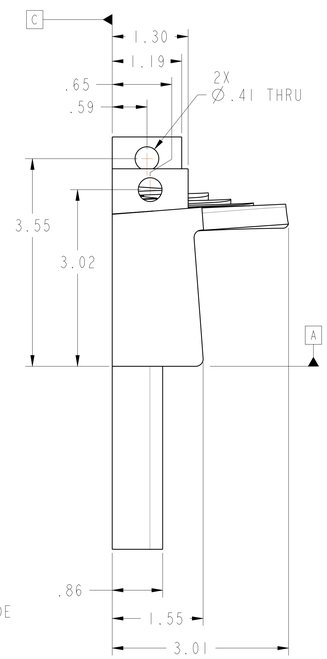

	1		-1	SIDE-A LOWER LEAD BLOCK	NEMA GRADE G-11CR	1
next assy	SE142C-131	CAGE CODE	PART OR IDENTIFYING NO	NOMENCLATURE OR DESCRIPTION	MATERIAL / SPECIFICATION	FIND NO
		←	NEXT ASSEMBLY		PARTS LIST	

SE142C-134

RELEASED FOR FABRICATION / INSTALLATION

PPPL Drafting ? Jerry Siegel 2005.06.10 10:27:43 -05'00'

REV	DESCRIPTION	BY	DATE	CHK	DEPT	DATE	PE	REQ	DATE	ORNL	DOE	DATE
0	INITIAL RELEASE	DEW	11/1									

REVISION OR ISSUE PURPOSE — REVISION APPROVAL

SCALE NOTED

TOLERANCES UNLESS OTHERWISE SPECIFIED

FRACTIONS :
XX DECIMALS ±.01
XXX DECIMALS ±.005
ANGLES ±0°15'
BREAK SHARP EDGES .06 MAX
FINISH .125 UNLESS OTHERWISE SPECIFIED

DRAWING APPROVALS		DATE
DES	P FOGARTY	05/05
DRW	D WILLIAMSON	05/05
CHK	G LOVETT	05/05
SECT	:	:
DEPT	:	:
PE	D WILLIAMSON	05/05
CR	:	:
PJ	:	:
REQ	:	:
PPPL DRFT	J SIEGEL	05/05

UT-BATTELLE

Oak Ridge National Laboratory
managed for the DEPARTMENT OF ENERGY under U.S. GOVERNMENT contract DE-AC05-000R22725
UT-BATTELLE, LLC. Oak Ridge, Tennessee

PROJECT NAME: NATIONAL COMPACT STELLARATOR EXPERIMENT

MODULAR COIL TYPE-C
SIDE-A LOWER LEAD BLOCK
STRAIGHT SLOTS

VERSION NO.	PLANT	BLDG	FL	SHT	OF	TYPE	CLASS
6	X-10	5700	3	1	1	S	U

RELEASE LEVEL: Fabrication — SE142C-134 — REV 0

NO REPRESENTATION OR WARRANTY,EXPRESSED OR IMPLIED,IS MADE AS TO THE ACCURACY, COMPLETENESS OR USEFULNESS OF THE INFORMATION OR STATEMENTS CONTAINED IN THESE DRAWINGS, OR THAT THE USE OR DISCLOSURE OF ANY INFORMATION, APPARATUS, METHOD OR PROCESS DISCLOSED IN THESE DRAWINGS MAY NOT INFRINGE PRIVATE RIGHTS OF OTHERS. NO LIABILITY IS ASSUMED WITH RESPECT TO THE USE OF, OR FOR DAMAGES RESULTING FROM THE USE OF, ANY INFORMATION, APPARATUS, METHOD OR PROCESS DISCLOSED IN THESE DRAWINGS. DRAWINGS MADE AVAILABLE FOR INFORMATION TO BIDDER ARE NOT TO BE USED FOR OTHER PURPOSES, AND ARE TO BE RETURNED UPON REQUEST OF THE FORWARDING CONTRACTOR.

P THIS DRAWING PRODUCED ON PRO-ENGINEER