NEXT ASS'Y: FINAL ASS'Y:

NOTES:
1. INTERPRET DIMENSIONS AND TOLERANCES PER ANSI Y14.5M.
2. DIMENSION ARE IN INCHES.
3. REQUIREMENTS FOR FABRICATING THE VACUUM VESSEL PROTOTYPE ARE DEFINED IN THE DRAWINGS, MODELS, AND SPECIFICATION, NCSX-CSPEC-121-01.
4. GEOMETRY OF VACUUM VESSEL PROTOTYPE IS DEFINED IN CAD MODELS/FILES SE121-001P.ASM, SE121-002P.ASM, AND SE121-003P.ASM.
5. PORT EXTENSION ITEM -3 CONSIST OF SE121-001P-3 AND SE121-001P-4.
6. WELDING PROCEEDURES AND PERFORMANCE QUALIFICATIONS SHALL BE PERFORMED IN ACCORDANCE WITH THE REQUIREMENTS OF ASME CODE, SECTION IX. WELDS MAY BE MADE BY THE GTAW OR GMAW PROCESSES. WELDS USING SMAW PROCESS ARE NOT PERMITTED. WELD INSPECTIONS SHALL BE PERFORMEND IN ACCORDANCE WITH SPECIFICATION NCSX-CSPEC-121-01-00.
7. PROJECTED TOLERANCE ZONE STARTS AT INTERSECTION OF PORT AXIS AND VACUUM VESSEL OUTER SURFACE AND EXTENDS OUTWARD.

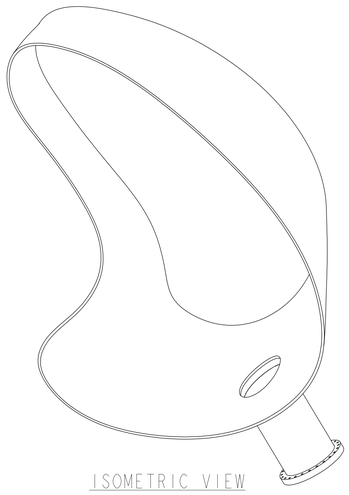

ISOMETRIC VIEW

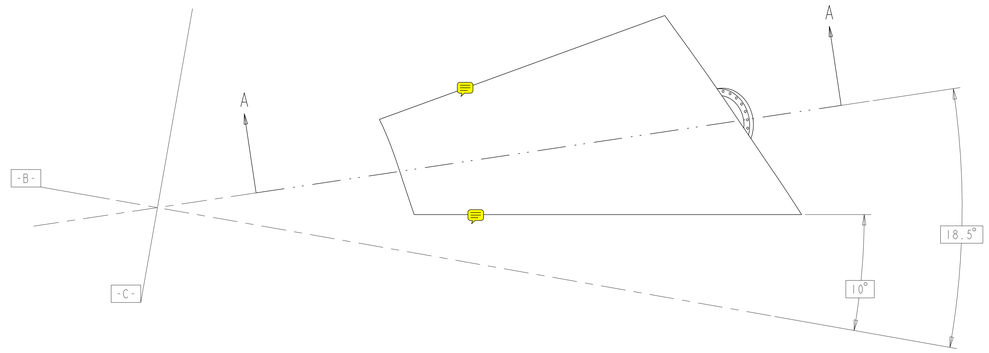

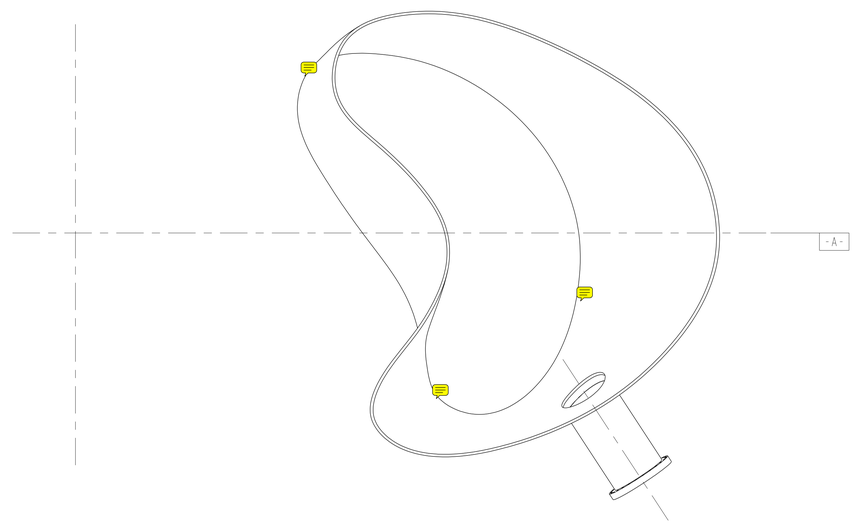

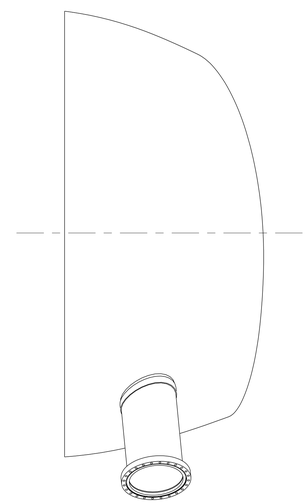

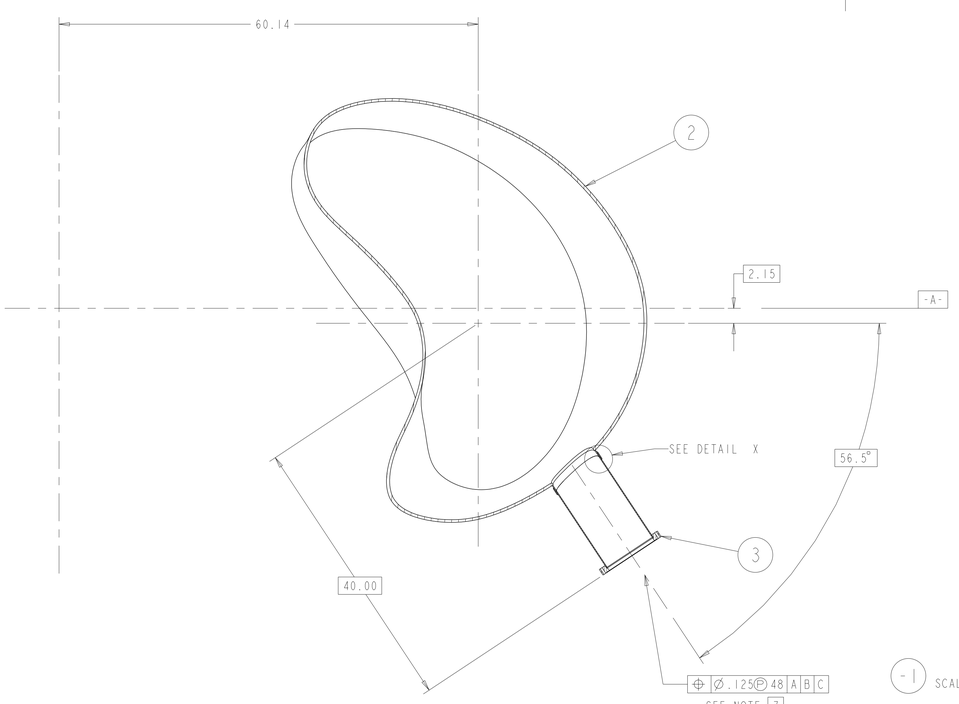

SECTION A-A

-1 SCALE: .12

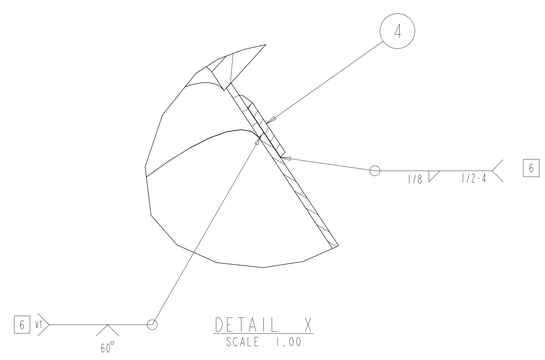

DETAIL X
SCALE 1.00

AR		-5	WELD FILLER METAL			5
1		-4	WELD BACKING RING	UNS N06625		4
5 1		-3	PORT EXTENSION			3
1		-2	PORT MODIFICATION DETAILS			2
		-1	PORT MODIFICATION WELDMENT			1
	CAGE CODE	PART OR IDENTIFYING NO	NOMENCLATURE OR DESCRIPTION	MATERIAL	SPECIFICATION	FIND NO
	NEXT ASSEMBLY		PARTS LIST			

QUALITY VERIFICATION
MECHANICAL AND STRUCTURAL
REFERENCE ORNL QA-G05

QV CLAUSE	DOCUMENTS REQUIRED	APPLICABLE TO PART NO ♦
303	MATERIAL MILL TEST REPORT	
325	MATERIAL SELLER CERT	
326	SPECIAL MATERIAL INSPECTION REPORT	
205	MANUFACTURING, INSPECTION, AND TEST PLAN	X
312	FIELD INSPECTION AND TEST PLAN	
321	WELD AND BRAZE INSPECTION REPORT	X
322	HEAT TREAT REPORT (W/CHART)	
310	LEAK TEST REPORT	X
315	CLEANING CERT	X
318	DEVIATION REQUEST	X
319	NONCONFORMANCE REPORT	X
323	DIMENSIONAL REPORT	X
330	FUNCTIONAL TEST REPORT	
100	DOCUMENTATION	X

♦ SYMBOL X INDICATES APPLICABLE TO ALL PARTS OR ITEMS

QA COORDINATOR ..... DATE .....

RELEASED FOR FABRICATION / INSTALLATION

WELDING ENGINEER
APPROVED Robert F Parsells DATE: _____

NO REPRESENTATION OR WARRANTY,EXPRESSED OR IMPLIED,IS MADE AS TO THE ACCURACY, COMPLETENESS OR USEFULNESS OF THE INFORMATION OR STATEMENTS CONTAINED IN THESE DRAWINGS, OR THAT THE USE OR DISCLOSURE OF ANY INFORMATION, APPARATUS, METHOD OR PROCESS DISCLOSED IN THESE DRAWINGS MAY NOT INFRINGE PRIVATE RIGHTS OF OTHERS. NO LIABILITY IS ASSUMED WITH RESPECT TO THE USE OF, OR FOR DAMAGES RESULTING FROM THE USE OF, ANY INFORMATION, APPARATUS, METHOD OR PROCESS DISCLOSED IN THESE DRAWINGS. DRAWINGS MADE AVAILABLE FOR INFORMATION TO BIDDER ARE NOT TO BE USED FOR OTHER PURPOSES, AND ARE TO BE RETURNED UPON REQUEST OF THE FORWARDING CONTRACTOR.

P THIS DRAWING PRODUCED ON PRO-ENGINEER

REV	DESCRIPTION	A-E	BY	CHK	SECT	DEPT	DATE	PE	REQ	DATE	ORNL	DATE	DOE	DATE	QA	CV	EC	EE	EM	IE	M	PD	SE	ST	XAD	PES
	REVISION OR ISSUE PURPOSE								REVISION APPROVALS						SQUAD CHECK											

SCALE NOTED
TOLERANCES UNLESS OTHERWISE SPECIFIED
FRACTIONS
XX DECIMALS ±.01
XXX DECIMALS ±.005
ANGLES ±0°15'
BREAK SHARP EDGES .06 MAX
FINISH 125 UNLESS OTHERWISE SPECIFIED

DRAWING APPROVALS		DATE
DES	P.L.GORANSON	Paul L. Goranson
DRW	G.H.JONES	Greg Jones
CHK	M.J.COLE	Michael Cole
SECT		
DEPT		
PE		
CR		
PJ		
REQ		
PPPL DRFT	J.SIEGEL	Jerry Siegel

UT-BATTELLE
Oak Ridge National Laboratory
managed for the DEPARTMENT OF ENERGY under U.S. GOVERNMENT contract DE-AC05-00OR22725
UT-BATTELLE, LLC. Oak Ridge, Tennessee

PROJECT NAME
NATIONAL COMPACT STELLERATOR EXPERIMENT

PROTOTYPE VACUUM VESSEL SUPPORT
PORT MODIFICATIONS
WELDMENT

VERSION NO.	PLANT	BLDG	FL	SHT	OF	TYPE	CLASS
12	Y-12	9201-2	2	1	1	A	U

RELEASE LEVEL: Fabrication
SE121-003P
REV 0

SE121-003P